RP-H***-***-DC**VS

(Models using stepping motor)

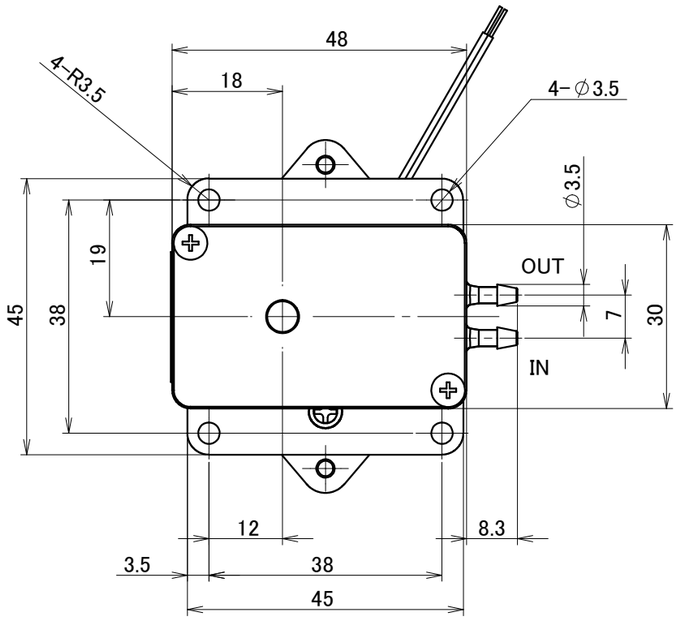

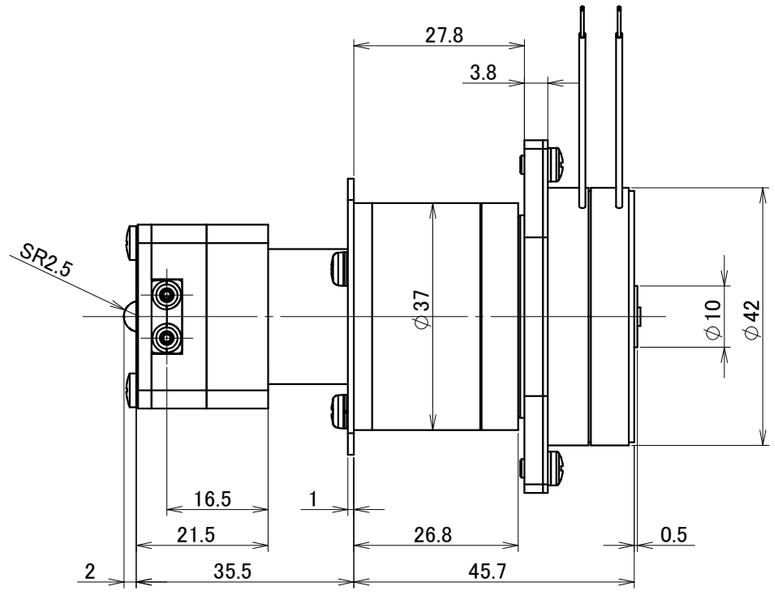

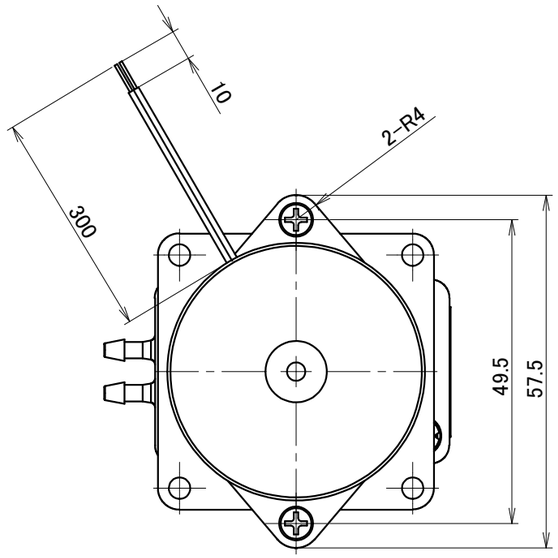

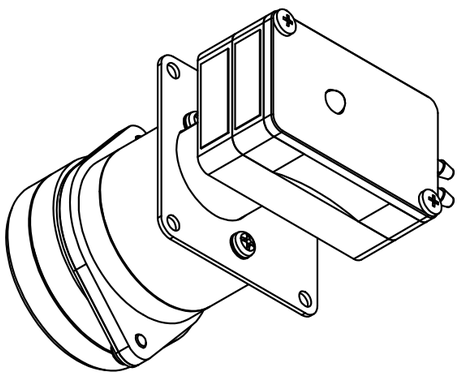

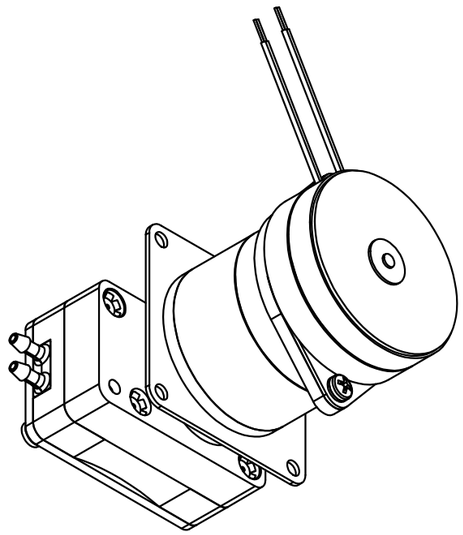

Isometric drawing S=Free

Scale 1:1

Aquatech Co., Ltd.

Unit: mm